ZAFRO

User Manual

Portable Air Conditioner



ITEM NO.: A9046D-8K / A9046D-10K
MODEL NO.: YAC-08CPD/PD7 / YAC-10CPD/PD7

A2L

WARNING-Risk of Fire due to Flammable Refrigerant Used. Follow Handling Instructions Carefully inCompliance with National Regulations.

C ETL LISTED US
Intertek
5028052

FC

Breathe fresher, breathe healthier.

Thank you for selecting ZAFRO

ZAFRO

CONTENT

SAFETY INSTRUCTION	1
KNOWING YOUR AC	3
CONNECTING TO YOUR AC	10
ASSEMBLING YOUR AC	11
TIPS FOR BETTER USE	14
CLEANING AND MAINTENANCE	15
WARRANTY	18
TROUBLESHOOTING	19

SAFETY INSTRUCTION

User Manual Portable Air Conditioner

This appliance is for household use only.

● Disconnect the appliance from its power source during service and when replacing parts and cleaning.
● Please note: Check the nameplate for the type of refrigerant gas used in your appliance.
● Specific information regarding appliances with refrigerant gas. The appliance is recommended not to pierce the cooling circuit of the machine. At the end of its useful life, deliver the appliance to a special waste collection centre for disposal. GWP(Global Warming Potential): R410A: 2088, R134a: 1430, R290: 3, R32: 675.
● This hermetically sealed system contains fluoridated greenhouse gases.
● ENVIRONMENTAL INFORMATION: This unit contains fluoridated greenhouse gases covered by the Kyoto Protocol.
● Do not use this unit for functions other than those described in this instruction manual.
● Make sure the plug is plugged firmly and completely into the outlet. It can result in the risk of electric shock or fire.
● Do not plug other appliances into the same outlet, it can result in the risk of electric shock.
● Do not disassemble or modify the appliance or the power cord, it can result in the risk of electric shock or fire. All other services should be referred to a qualified technician.
● Do not place the power cord or appliance near a heater, radiator, or other heat source. It can result in the risk of electric shock or fire.
● This unit is equipped with a cord that has a earthed wire connected to an earthed pin or grounding tab. The plug must be plugged into a socket that is properly installed and earthed. Do not under any circumstances cut or remove the earthed pin or grounding tab from this plug.
● The unit should be used or store in such a way that it is protected from moisture e.g. condensation, splashed water, etc. Unplug unit immediately if this occurs.
● Always transport your appliance in a vertical position and place on a stable, level surface during use. If the unit is transported laying on its side it should be stood up and left unplugged for 6 hours.
● Always use the switch on the control panel or remote controller to turn the unit off, and do not start or stop operation by plugging in or unplugging the power plug. It can result in the risk of electric shock.
● Do not use hazardous chemicals to clean or come into contact with the unit. To prevent damage to the surface finish, use only a soft cloth to clean the appliance. Do not use wax, thinner, or a strong detergent. Do not use the unit in the presence of inflammable substance or vapour such as alcohol, insecticides, gasoline, etc.
● If the appliance is making unusual sounds or is emitting smoke or an unusual odor, unplug it immediately.
● Do not clean the unit with water. Water can enter the unit and damage the insulation, creating a shock hazard. If water enters the unit, unplug it immediately and contact Customer Service.
● Utilize two or more people to lift and install the unit.
● Always grasp the plug when plugging in or unplugging the appliance. Never unplug by pulling on the cord. It can result in the risk of electrical shock and damage.
● Install the appliance on a sturdy, level floor capable of supporting up to 110lbs(50kg). Installation on a weak or unlevel floor can result in the risk of property damage and personal injury.
● Details of type and rating of fuses：T, 250V AC, 3.15A.

⚠ WARNING

-This appliance is not intended for use by persons (including children)with reduced physical, sensory or mental capabilities, or lack of experience and knowledge, unless they have been given supervision or instruction concerning use of the appliance by a person responsible for their safety.
-Children should be supervised to ensure that they do not play with the appliance.
-If the SUPPLY CORD is damaged, it must be replaced by the manufacturer, its service agent or similarly qualified persons in order to avoid a hazard.
-The appliance shall be installed in accordance with national wiring regulations.
-Do not use means to accelerate the defrosting process or to clean, other than those recommended by the manufacturer.
-The appliance shall be stored in a room without continuously operating ignition sources (for example: open flames, an operating gas appliance or an operating electric heater.
-Do not pierce or burn.
-Be aware that refrigerants may not contain an odour.

⚠ WARNING

-The handling, installation, storage, servicing and disposal must comply with the provisions of gas-related national laws and regulations, and also national wiring regulation.
-It is necessary to clear away the refrigerant in the system when maintaining or scrapping an appliance.
-Ventilated area (open doors and Windows)
-Ensure that the working area is open or well ventilated before turning on the system or performing hot work. Ventilation should be maintained during operation. Ventilation quickly displaces safely diluted leaked refrigerant into the atmosphere.
-Flammable refrigerant R32/R290 is used within appliance. Please follow the instructions carefully to handle, install, clean, and service the appliance to avoid damage or hazard.
-Do not dispose of appliance in regular trash. Contact qualified agency for proper disposal.
-Servicing shall be performed only as recommended by the manufacturer.

TEL: 818-468-3970 Web:www.zafroshop.com

GROUNDING INSTRUCTION

This product is factory equipped with a power supply cord that has a three-pronged grounded plug. It must be plugged into a mating grounding type receptacle in accordance with the National Electrical Code and applicable local codes and ordinances.

If the circuit does not have a grounding type receptacle, it is the responsibility and obligation of the customer to exchange the existing receptacle in accordance with the National Electrical Code and applicable local codes and ordinances. The third ground prong should not, under any circumstances, be cut or removed.

Never use the cord, the plug or the appliance when they show any sign of damage.

Do not use your appliance with an extension cord unless it has been checked and tested by a qualified electrical supplier.

Improper connection of the grounding plug can result in risk of fire, electric shock and/or injury to persons associated with the appliance.

Check with a qualified service representative if in doubt that the appliance is properly grounded.

LCDI POWER CORD AND PLUG

⚠ WARNING

TEST LCDI before each use.

To test the plug.

1.Plug power cord into a grounded 3-prong outlet.
2.Press RESET (on some units a green light will turn on)
3.Press the TEST button,the circuit should trip and cut all power to the air conditioner (on some units green light may turn off).
4.Press the RESET button for use. You will hear a click and the A/C is ready for use.
5.The power supply cord must be replaced if it fails to trip when the TEST button is pressed and the unit fails to reset.

NOTE:

- Do not use this device to turn the unit on or off.
-Always make sure the reset button is pushed in for correct operation.

⚠ WARNING

-The power supply cord must be replaced if it fails to reset when either the test button is pushed, or it cannot be reset.
-If power supply cord is damaged, it cannot be repaired.
-it must be replaced by one obtained from the product manufacturer.

⚠ WARNING-risk of FIRE

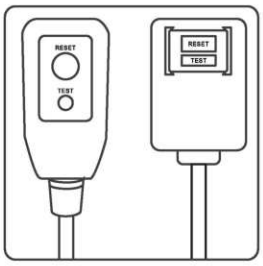

It is important the plug fits tightly into the wall outlet.If the plug does not fit securely and appears loose, it should not be used. Have a licensed electrician replace the receptacle.

Specifications

Model No.	YAC-08CPD/PD7	YAC-10CPD/PD7
Rated voltage	115V~ / 60Hz	115V~ / 60Hz
Cooling Capacity	12000 Btu/h (ASHRAE)	14000 Btu/h (ASHRAE)
Cooling Capacity	8000Btu/h (SACC)	10000Btu/h (SACC)

SAVE THESE INSTRUCTIONS

FOR HOUSEHOLD USE ONLY

TEL: 818-468-3970 Web:www.zafroshop.com

KNOWING YOUR AC

User Manual Portable Air Conditioner

PRODUCT OVERVIEW

- Before using your unit for the first time, please unpack and check if there is any damage, scratch or lost accessory.
- Before using your unit for the first time, please let the air conditioner stand upright for at least 6 hours.

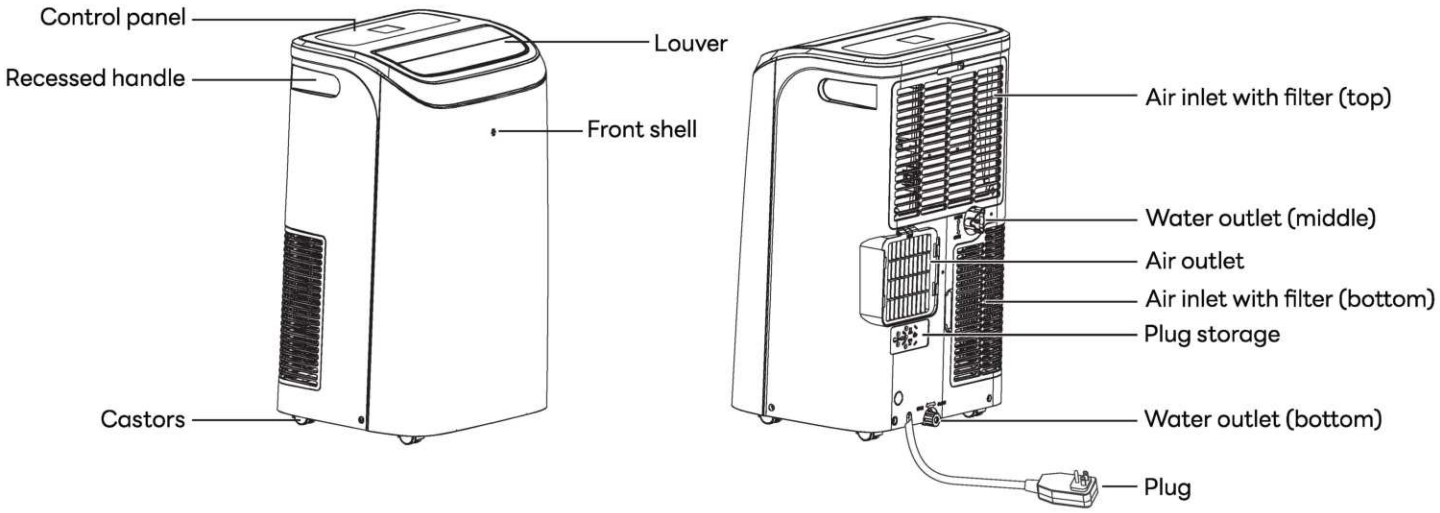

No.	Component Name	Quantity	No.	Component Name	Quantity
1.	Air exhaust hose 	1 set	6.	Manual	1 pc
2.	Bracket 	1 set	7.	Batteries (AAA) 	2 pcs
3.	Window panel (Marked with A, B, C and D) 	1 set (4 pcs)	8.	Drainage hose 	1 pc
4.	Remote control 	1 pc	9.	Sealing foam (adhesive and non-adhesive) 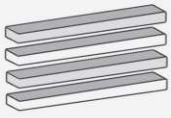	4 pcs
5.	Remote control bracket 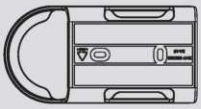	1 pc	10.	Butterfly bolts 	4 pcs

TEL: 818-468-3970 Web:www.zafroshop.com

Display area icon

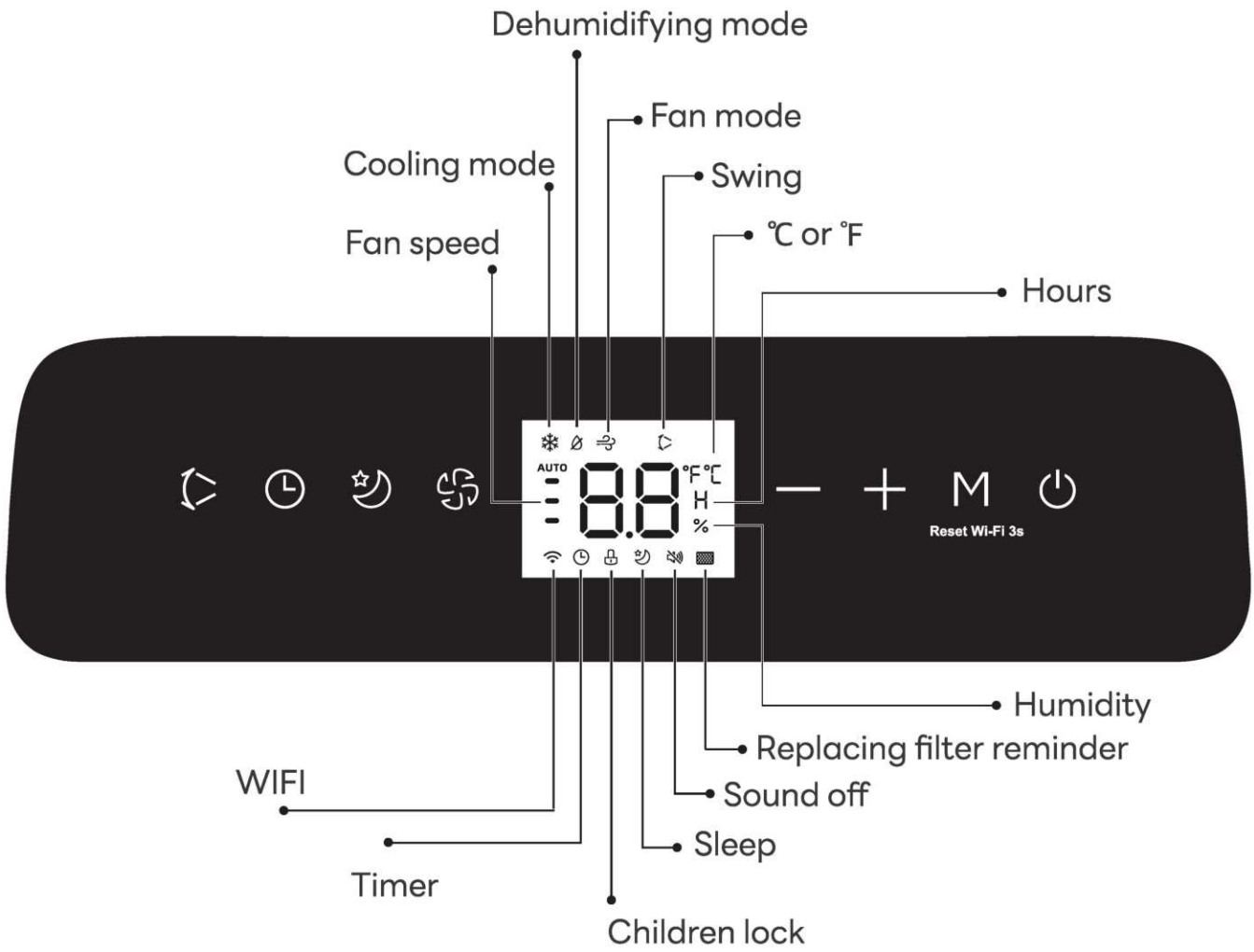

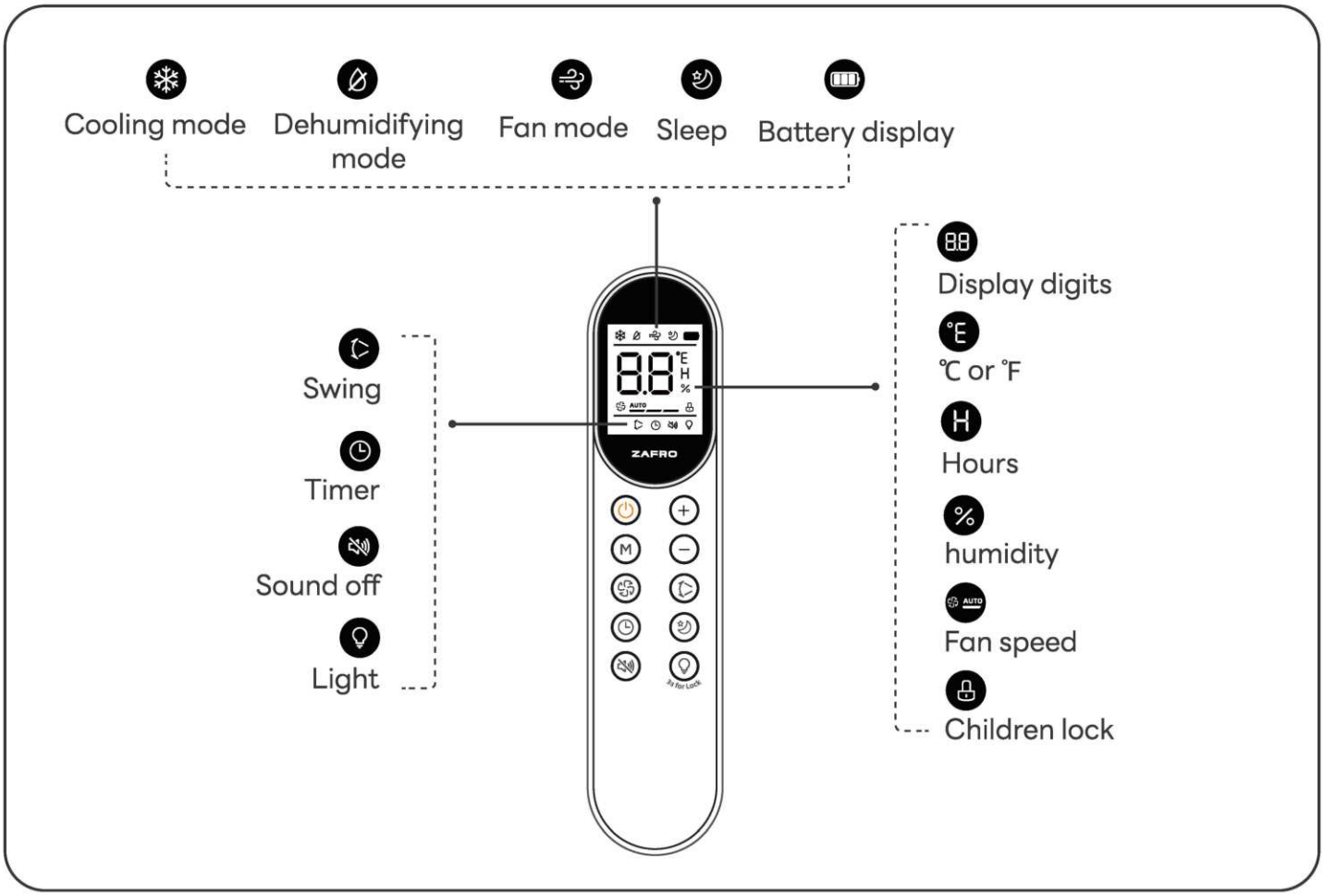

Point the remote control at the receiver on the appliance.
The remote control must be no more than 7 meters away from the appliance (without obstacles between the remote control and the receiver).
The remote control must be handled with extreme care. Do not drop it or expose it to direct sunlight or sources of heat.
If the remote control do not work, please try to take out the battery, and put it back again.

INSERTING OR REPLACING THE BATTERIES

- Remove the cover on the rear of the remote control;
- Insert two "AAA" 1.5V batteries in the correct position (see instructions inside the battery compartment);
- Put the cover back to the remote control.

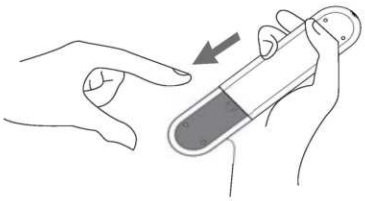

NOTE:

√ If the remote control unit is replaced or disposed of, the batteries must be removed and discarded in accordance with current legislation as they are harmful to the environment.

√ Do not mix old and new batteries. Do not mix alkaline, standard (carbon-zinc) or rechargeable (nickel-cadmium) batteries.

√ Do not dispose of batteries in fire. Batteries may explode or leak.

√ If the remote control is not be used for a certain length of time, remove the batteries.

Button	Control Panel	Remote control	Function
Mode	M		Press this button to cycle the working modes within "Cooling", "dehumidifying" and "Fan"
POWER			Press this button to turn on/off the unit
Add	+		●When in Cooling mode, press it once to add the temperature setting by 1 °C/°F. ●When in Dehumidifying mode, press it once to add humidity setting by 5%. ●When in Fan mode, press it once to turn up the fan speed. ●When Timer function is activated, press this button once to add the setting time by 0.5 hr.
Subtract	—	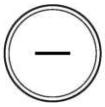	●When in Cooling mode, press it once to subtract the temperature setting by 1 °C/°F ●When in Dehumidifying mode, press it once to subtract humidity setting by 5% ●When in Fan mode, press it once to turn down the fan speed. ●When Timer function is activated, press this button once to subtract the setting time by 0.5 hr.
Fan speed			Press this button to cycle the Fan speed within "Low", "Middle", "High", and "Auto", whether in Cooling mode, Dehumidifying mode, or Fan mode.

TEL: 818-468-3970 Web:www.zafroshop.com

Sleep			**Press this button once to enter Sleep mode.**
Timer			**●When the unit is in the standby mode, press this button to program the start-up time.** **●When the unit is running, press this button to program the shut-down time.** **●The programmable time range is 0.5-24hrs.**
Swing			**Press this button to activate or shut down this swing function.**

SPECIAL FEATURES

● Children lock

1. Press and hold and button on the control panel for 3 seconds display screen enters 3-2-1 countdown to turn on or off the Children Lock.
2. Long press button on the remote control for 3s to turn on or off the Children Lock.
3. When the Children Lock is activated with the control panel, the unit can be controlled by remote control only. When the Children Lock is activated with the remote, then it must be unlocked to perform any operation.

● Light

1. Press and hold button on the control panel for 3sec when the unit is running, display screen enters 3-2-1 countdown, all the display screen will be turned off; When pressed and hold again, all display lights will resume.
2. Press button on the remote control when the unit is running, all the display screen will be turned off; When pressed and hold again, all display lights will resume.

TEL: 818-468-3970 Web:www.zafroshop.com

● Cleaning filter reminder

1.When the filter needs to be cleaned, the ▩ symbol will light up(after 600 hours of use).

2.After cleaning the filters, place filter back in the unit and hold the ⏲ button on the control panel 3 second, display screen enters 3-2-1 countdown, reset the time and the ▩ symbol is turn off.

● Switch the unit of temperature

1. When the appliance is running, hold on " - " and " + " button together 3 seconds on the control panel by the same time, display screen enters 3-2-1 countdown, then you can change the unit of temperature.
2. When the unit is running at Cooling mode, press the 🕒 button on the remote control, display screen enters 3-2-1 countdown,then you can change the unit of temperature.

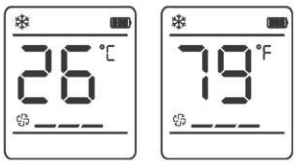

● Power off memory function

After a sudden power failure, the unit will work in the same mode as before the last power failure when the unit is turned on again. And the fan speed is low by default.

● Silent mode

1.Press the 🔇 button on the remote control, the unit will enter Silent mode, the buzzer will be turned off.
2.Press the 🔇 button again to turn on the buzzer.

TEL: 818-468-3970 Web:www.zafroshop.com

MODES

● Fan Mode

1. Press M button to change the mode to Fan mode. And the AC will only blow room-temperature air.
2. Adjust the fan speed within 4 setting.(Low, Mid, High, Auto)
3. When in Fan mode, the air exhaust hose doesn't need to be attached.

● Cooling Mode

1. The recommended working ambient temperature range for cooling mode is 64-95°F
2. Press M button to change the working mode to Cooling mode.
3. Press + — to adjust the desired temperature setting.
4. The adjustable temperature range is 61-86°F.

● Dehumidifying

1. The recommended working ambient temperature range for dehumidifying mode is 50-77°F
2. Dehumidifying mode is ideal to reduce room humidity (spring and autumn, damp rooms, rainy periods, etc).
3. Press M button to change the working mode to dehumidifying mode.
4. Press + — to adjust the desired humidity setting. Each press will add/subtract the humidity setting by 5%.
5. The adjustable humidity setting range is 30-70%.

● Sleep

1. Press button to enter Sleep mode. The screen will reduce the brightness, after 6 seconds no operation is performed and the display lights off. The fan speed keep lowest.
2. Under the Sleep mode, fan speed is always at lowest, while room temperature and humidity vary gradually to ensure the most comfortable environment.
3. The Sleep mode can be cancelled at any time during operation by pressing the M, or button.
4. The Sleep mode is not available for Fan mode.

CONNECTING TO YOUR AC

User Manual Portable Air Conditioner

Before start, scan this QR code to watch app guide video, explore your new experience.

Scan this QR code to download ZAFRO app

(Find A9046D-10K / A9046D-8K when you're connecting your unit.)
(To ensure compatibility, IOS 12.0 or later/ Android 7.0 or later is required.)

1. Download ZAFRO and create a new account.



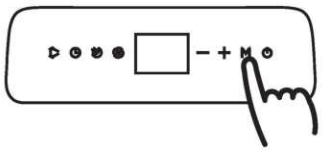

2. Plug your unit. Long press "M" on the control panel for 3s to open the WIFI module.
(The WIFI symbol on the display flashes)

3. Turn on the Bluetooth in your cellphone.





4. Watch the app guide video and connect your unit.
(The WIFI symbol on the display stays solid)

5. Now you are ready to control your unit on your app.

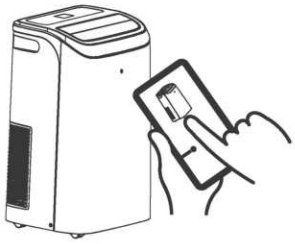

ASSEMBLING YOUR AC

User Manual Portable Air Conditioner

Scan this QR code to watch the installation video.

Step 1:

Measure the length of A (marked as below). Select the window panels you will need.

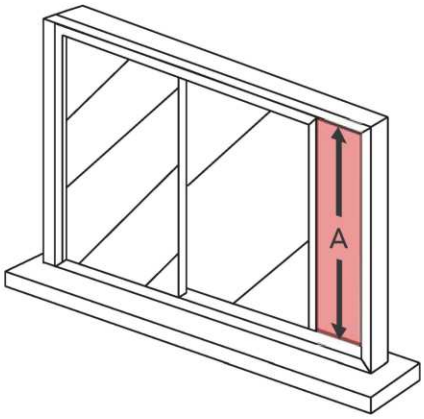

Adhesive foam

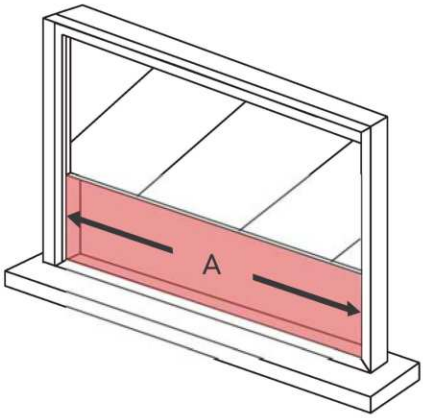

Adhesive foam

	20.47"-31.49"	31.49"-39.37"	40.94"-50.39"	50.39"-58.27"	58.27"-69.29"
A	✓	✓	✓	✓	✓
B	✓		✓		✓
C			✓	✓	✓
D		✓		✓	✓

Note: If the window panels provided do not meet your needs, please contact ZAFRO Customer Care.

Step 2:

Assemble the window panels.



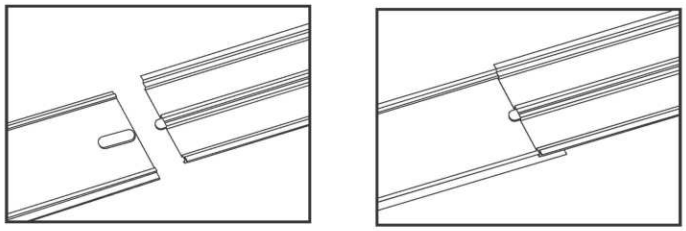

Pre-install the metal clip first, then assemble the window panels with inserting the metalk clip into the path on the other panel.

Step 3:

Cut the adhesive sealing foam according to the dimension of the window, then place it.

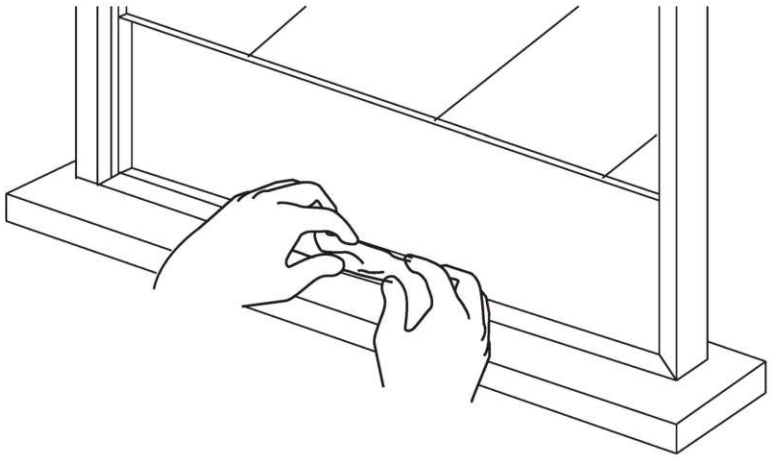

Step 4:

Place the window panels assembly onto the window.

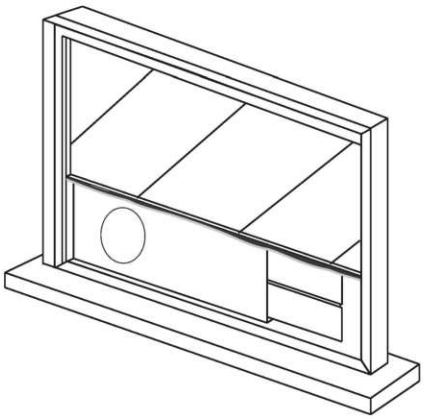

Step 5

Adjust the window panels assembly to fit in the window opening. Then fasten it with butterfly bolts.

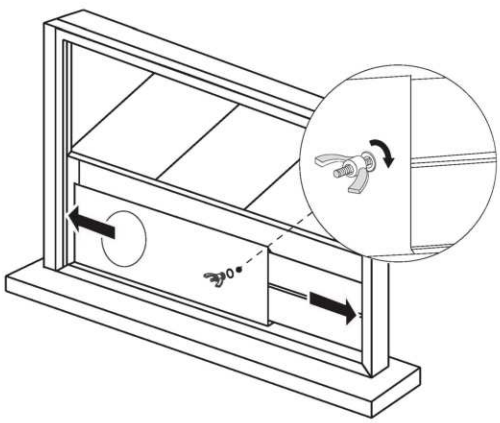

Step 6

Close the window. Other gaps in the Window can be filled with non-adhesive sealing foam as needed to improve the sealing of the room.

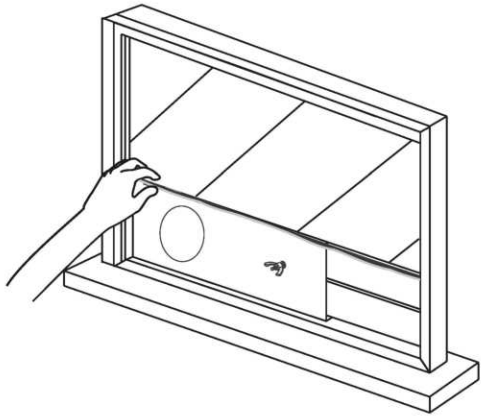

Step 7

Align and install the air exhaust hose assembly into the window panel. (Press the latch to lock the air exhaust hose into the hole in the window panel.)

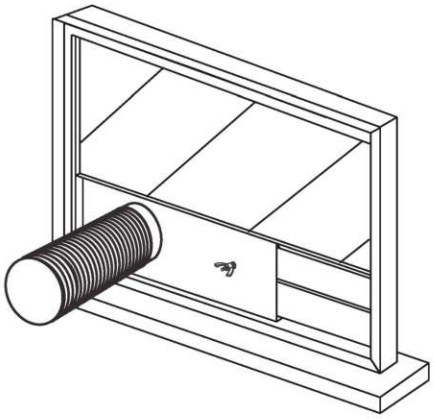

Step 8

Attach the other end of the air exhaust hose onto the window panels assembly.

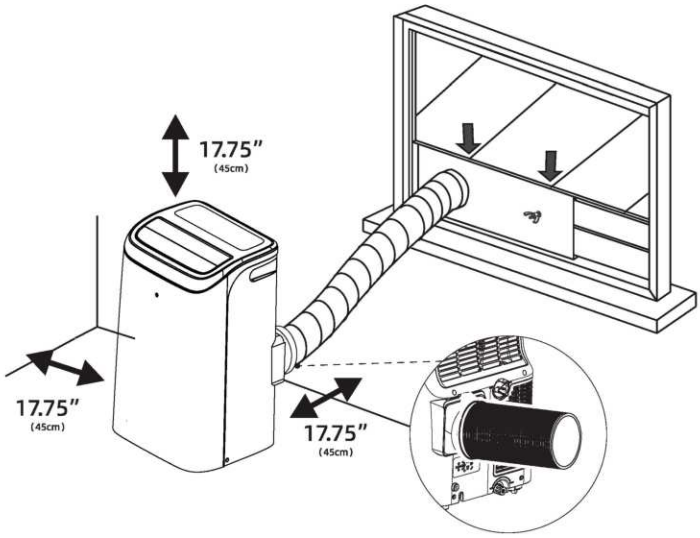

TIPS FOR BETTER USE

User Manual Portable Air Conditioner

To get the best from your appliance, follow these recommendations:

- Close the windows and doors in the room to be air conditioned. When installing the appliance semi-permanently, you should leave a door slightly open (as little as 1 cm) to guarantee correct ventilation;
- Protect the room from direct exposure to the sun by partially closing curtains and/or blinds to make the appliance much more economical to run;
- Never rest objects of any kind on the appliance;
- Do not block the air inlet or outlet of the appliance. Reduced air flow will result in poor performance and could damage the unit.
- Make sure there are no heat sources in the room;
- Never use the appliance in very damp rooms (laundries for example).
- Never use the appliance outdoors.
- Make sure the appliance is standing on a level surface. If necessary, place the castor locks under the front wheels.



Close doors and windows

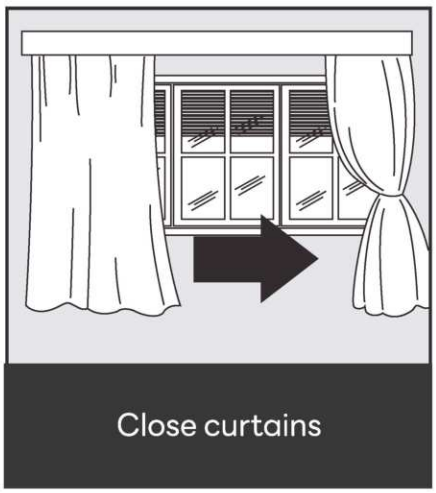

Close curtains



Do not cover the appliance

TEL: 818-468-3970 Web:www.zafroshop.com

CLEANING AND MAINTENANCE

User Manual Portable Air Conditioner

CLEANING

Before cleaning or maintenance, turn the appliance off by pressing the ⏻ button on the control panel or remote control, wait for a few minutes then unplug from the mains socket.

CLEANING THE CABINET

You should clean the appliance with a slightly damp cloth then dry with a dry cloth.

- Never wash the appliance with water. It could be dangerous.
- Never use petrol, alcohol or solvents to clean the appliance.
- Never spray insecticide liquids or similar.

CLEANING THE AIR FILTERS

- To keep your appliance working efficiently, you should clean the filter every month of operation.
- The filter can be taken out.
- To avoid possible cuts, avoid contacting the metal parts of the appliance when removing or reinstalling the filter. It can result in the risk of personal injury.
- Use a vacuum cleaner to remove dust accumulations from the filter. If it is very dirty, immerse in warm water and rinse a number of times. The water should never be hotter than 40℃(104℉). After washing, leave the filter to dry then attach the intake grille to the appliance.
- When the filter needs to be cleaned, the ▩ symbol will light up(after 600 hours of use).

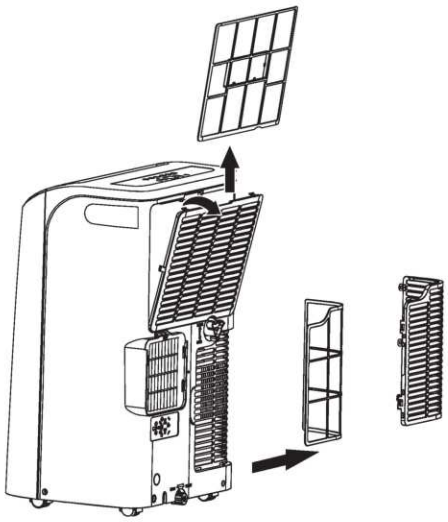

TEL: 818-468-3970 Web:www.zafroshop.com

DRAINING

Manual draining

Water may need to be drained in high humidity areas.

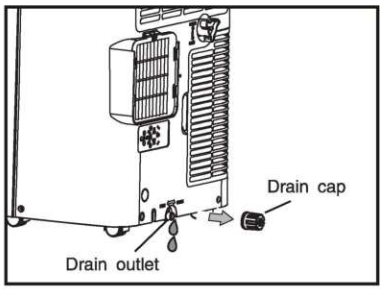

- Unplug the unit from power source.
- Move the unit to an open ground for convenient drainage.
- Remove the bottom drain plug.
- Tilt the unit slightly backward to drain completely.
- After the water is drained, replace the bottom drain plug firmly.
- Turn on the unit again.

Continuous draining

While using the unit in Dehumidifying mode, continuous drainage is recommended.

- Unplug the unit from the power source.
- Remove the middle drain plug. While doing this operation some residual water may spill so please have a container to collect the water.
- Connect the drain hose. See diagram.
- The water can be continuously drained through the hose into a floor drain or the prepared container.
- Turn on the unit.

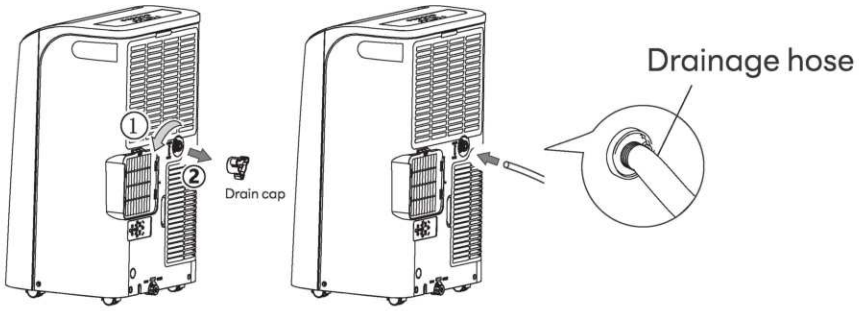

NOTE

Please be sure that the height of and section of the drain hose should not be higher than that of the drain outlet, or the water tank may not be drained.

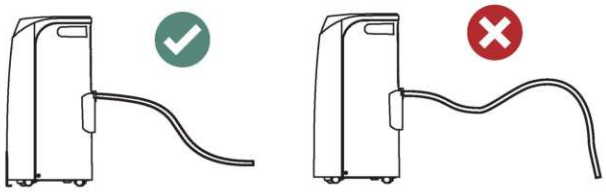

TEL: 818-468-3970 Web:www.zafroshop.com

STORAGE

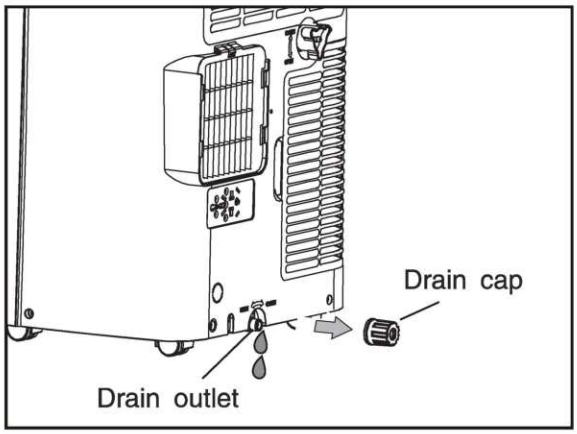

- To empty the internal circuit completely of water, remove the cap. Run off all water left into a basin. When all the water has been drained, put the cap back in place.

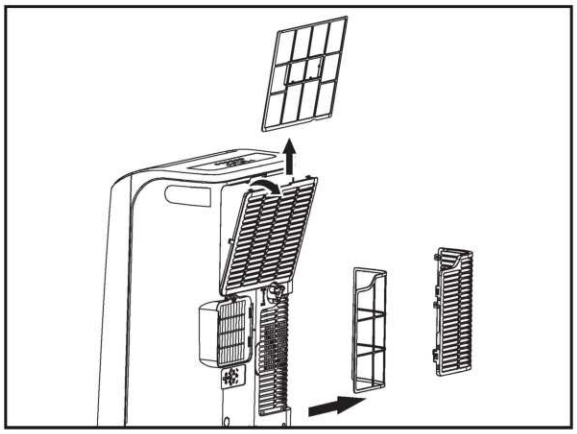

- Clean the filter and dry thoroughly before putting back.

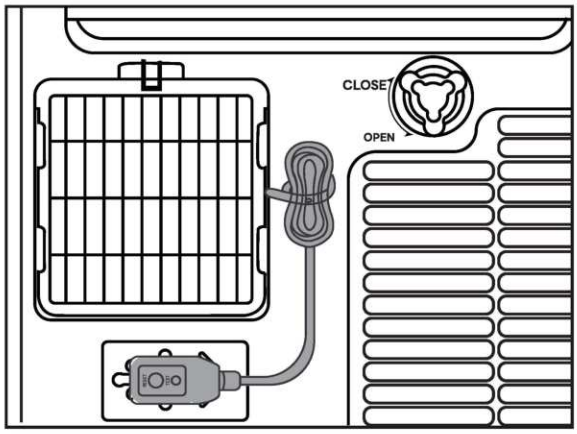

- Storage the power cord in place.

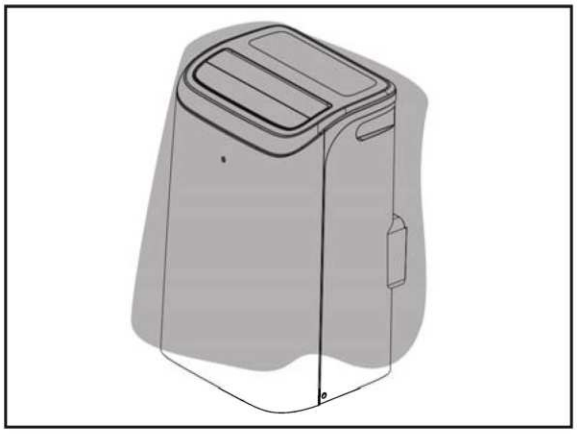

- Wrap the unit with a cover to protect it from dust and water.

TEL: 818-468-3970 Web:www.zafroshop.com

WARRANTY

User Manual Portable Air Conditioner

ZAFRO Air Conditioner is offered 1-year warranty from the date of its original purchase.

The product is not covered by its warranty in the following conditions:

- Misuse or unauthorized repair performed by unqualified person.
- Other purposes other than household use.
- Damages due to operations not recommended in the user manual.
- Using unqualified parts or accessories to perform repair.
- Damages due to shipping to repair, service or replacement.
- Normal wear and tear of wearable accessories and parts.
- Damage due to force majeure.

TROUBLESHOOTING

User Manual Portable Air Conditioner

PROBLEM	CAUSE	SOLUTION
The appliance does not come on	● There is no current ● It is not plugged into the mains ● The internal safety device has tripped	● Wait ● Plug into the mains ● Wait 30 minutes, if the problem persists, contact your service center
The appliance works for a short time only	● Here are bends in the air exhaust hose ● Something is preventing the air from being discharged	● Position the air exhaust hose correctly, keeping it as short and free of curves as possible to avoid bottlenecks ● Check and remove any obstacles obstructing air discharge
The appliance works, but does not cool the room	Windows, doors and/or curtains open	Close doors, windows and curtains, bearing in mind the "tips for correct use" given above
	There are heat sources in the room (oven, hairdryer, etc)	Eliminate the heat sources
	The air exhaust hose is detached from the appliance	Fit the air exhaust hose in the housing at the back of the appliance
	The technical specification of the appliance is not adequate for the room in which it is located	Move the air conditioner to a suitable room
During operation, there is an unpleasant smell in the room	Air filter clogged	Clean the filter as described above
The appliance does not operate for about three minutes after restarting it	The internal compressor safety device prevents the appliance from being restarted until three minutes have elapsed since it was last turned off	Wait. This delay is part of normal operation

TEL: 818-468-3970 Web:www.zafroshop.com

IF IS DISPLAYED	WHAT SHOULD I DO?
 PROBE FAILURE (sensor damaged)	If this is displayed, contact your local authorize service centre.
 High water level (safety tank full)	Empty the internal safety tank, following the instructions in the "Storage" paragraph.

TEL: 818-468-3970 Web:www.zafroshop.com

FCC statement

FCC Caution

This device complies with part 15 of the FCC Rules. Operation is subject to the following two conditions:

(1) This device may not cause harmful interference, and (2) this device must accept any interference received, including interference that may cause undesired operation.

Any Changes or modifications not expressly approved by the party responsible for compliance could void the user's authority to operate the equipment.

Note: This equipment has been tested and found to comply with the limits for a Class B digital device, pursuant to part 15 of the FCC Rules. These limits are designed to provide reasonable protection against harmful interference in a residential installation. This equipment generates uses and can radiate radio frequency energy and, if not installed and used in accordance with the instructions, may cause harmful interference to radio communications. However, there is no guarantee that interference will not occur in a particular installation. If this equipment does cause harmful interference to radio or television reception, which can be determined by turning the equipment off and on, the user is encouraged to try to correct the interference by one or more of the following measures:

-Reorient or relocate the receiving antenna.

-Increase the separation between the equipment and receiver.

-Connect the equipment into an outlet on a circuit different from that to which the receiver is connected.

-Consult the dealer or an experienced radio/TV technician for help.

IC Warning

This device complies with industry Canada's licence-exempt RSSs. Operation is subject to the following two conditions:

(1) This device may not cause interference; and
(2) This device must accept any interference, including interference that may cause undesired operation of the device.

Cet appareil est conforme aux CNR exemptes de licence d'Industrie Canada . Son fonctionnement est soumis aux deux conditions suivantes :

(1) Ce dispositif ne peut causer d'interf é rences ; et
(2) Ce dispositif doit accepter toute interf é rence , y compris les interf é rences qui peuvent causer un mauvais fonctionnement de l'appareil.

TEL: 818-468-3970 Web:www.zafroshop.com

Do not dispose of electrical appliances as unsorted municipal waste, use separate collection facilities. Contact your local government for information regarding the collection systems available. If electrical appliances are disposed of in landfills or dumps, hazardous substances can leak into the groundwater and get into the food chain damaging your health and well-being.



BE A POPULAR AND TRUSTWORTHY BRAND

818-468-3970

www.zafroshop.com

aftersale@zafroshop.com

(8:30am-5:30pm P.S.T.)

DATED PROOF OF PURCHASE IS REQUIRED FOR WARRANTY SERVICE.

ROWAN ELECTRIC APPLIANCE LLC

